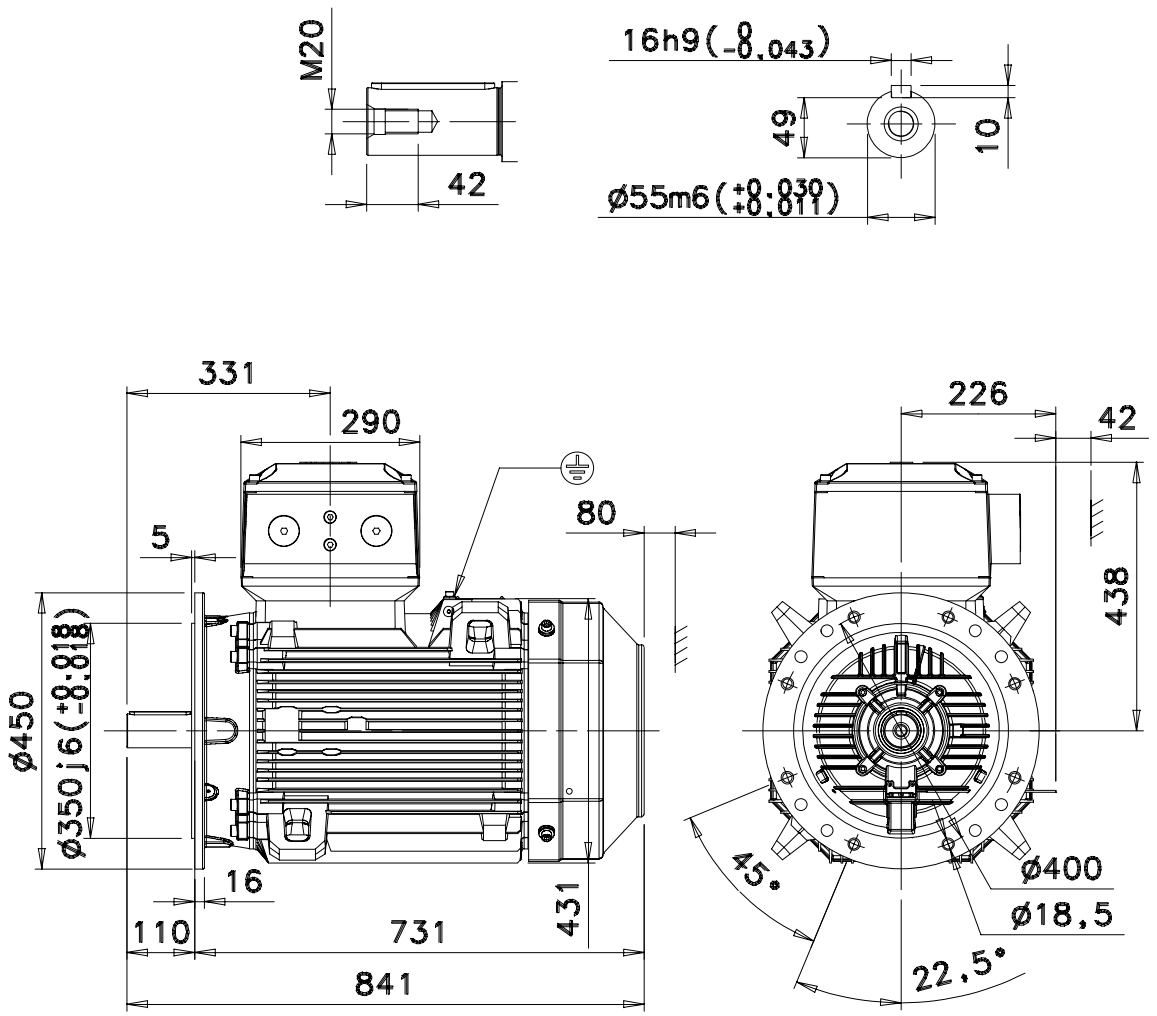

Additional information:

Dimension Print	Motor Type: M3JP 225SM_2 B5,V3	Document No: 3GZF500222-10 B 13 JP 225 A
Description: STANDARD SQUIRREL CAGE MOTOR		
Unit: Electrical Machines, LV Motors Date: 10.05.2001	Issued by: K.Edsvik Approved by: L.Järf	Replaces: Replaced by:
ABB Oy	Customer Reference:	ABB